FLOOR & DECOR TILE • WOOD • STONE
brings you
ATLANTA HOME SHOW

Dear Exhibitor,

Marketplace Events welcomes you to the 41st Annual Spring Atlanta Home Show, March 22-24, 2019 at the Cobb Galleria Centre. We sincerely appreciate your support of this Atlanta tradition and look forward to servicing your needs while at the show.

In order to streamline your move-in, we have assigned you a specific move-in time. Please read through the enclosed information carefully and refer to the enclosed map for directions. Upon your arrival, our move-in crew will help direct and guide you to your booth. **Please use extreme caution while on the show floor. People and forklifts can appear from behind drape and exhibits quickly and without notice.**

A few notes about the show in general: **Floor covering is required for ALL booth space.** Badges will be at the Show Office, located in Room #120. Please take the time to review Booth Construction Guidelines and call us with any questions. We would suggest that you park in the decks at the Cobb Galleria Centre and avoid parking at the Waverly Hotel or Cumberland Mall as these two areas are outside of our contracted space for the show and unauthorized vehicles may be towed without notice or warning. The exhibition halls are under constant camera surveillance but please take extra precautions for keeping your valuables safe at all times, especially during move-in and move-out times.

Please note: All exhibits must be completely removed from the exhibit hall by 2:00pm on Monday, March 25th. No exceptions can be made as another show is moving in right behind us.

If you have any questions or need assistance, please don't hesitate to call:

Marketplace Events Staff

Mark Levine, *Assistant Show Manager*	(770) 776-2616
Kim Huggins, *Exhibit Sales Consultant*	(770) 776-2617
Veronica McGlothlin, *Exhibit Sales Consultant*	(770) 776-2618
M.J. Doan, *Show / Office Administrator*	(317) 705-8719 ext. 71

FLOOR & DECOR TILE • WOOD • STONE brings you ATLANTA HOME SHOW

March 22-24, 2019
Cobb Galleria Centre

Exhibitor Checklist

Completed	*Due Date*	*Form*
	*Now	Read this Manual! Please be sure your display meets the show's booth construction guidelines (see diagram within this Exhibitor Kit).
	February 12th	**DEADLINES FOR SHOW GUIDE** (MPE) *If we have not received your fully completed contract by this date, you may not appear in the show guide*
	February 22nd	**Final Payment due to MPE**
	February 22nd	**Cobb Galleria Forms** (Send to Cobb Galleria) -Cooking Authorization Request -Food and Beverage Sample Form
	March 1st	**DISCOUNT DEADLINE – Standard Orders** (Order Online - Shepard) -Carpet/Furniture/Specialty Furniture
	March 4th	**DISCOUNT DEADLINE** (Order Online - Cobb Galleria) -Cable/Electrical/Telecommunications
	March 8th	**Exhibitor Discount Ticket Request Deadline** (Send to MPE)
	March 11th	**Advanced Shipping Deadline** (Send to Shepard)

Important Websites
Cobb Galleria Centre – www.cobbgalleria.com
Shepard Exposition Services – www.shepardes.com
Show Website – www.atlantahomeshow.com

FLOOR & DECOR TILE • WOOD • STONE
brings you
ATLANTA HOME SHOW

March 22-24, 2019
Cobb Galleria Centre

Exhibitor Information

Show Dates/Hours

Friday, March 22	10:00 am – 6:00 pm
Saturday, March 23	10:00 am – 8:00 pm
Sunday, March 24	11:00 am – 5:00 pm

Move-in Dates/Hours

Monday, March 18	Noon – 8:00 pm
Tuesday, March 19	8:00 am – 8:00 pm
Wednesday, March 20	8:00 am – 8:00 pm
Thursday, March 21	8:00 am 8:00 pm

Move-out Dates/Hours

Sunday, March 24	5:00 pm – Midnight
Monday, March 25	8:00 am – 2:00 pm

You will receive a specific move in day and time approximately 30 days prior to the event.

Show Office/Sales Office/Press Room (Open Tuesday-Monday)
Room #120

Exhibitor Lounge (Open Friday-Sunday)
Room #119
**Coffee will be available Friday & Saturday: 9:30am – 12:30pm and Sunday: 10:30am – 12:30pm.*

Exhibitor Registration & Will Call
In the Show Office, Room #120. Exhibitors pick up badges and VIP Tickets.

Monday, March 18	2:00 pm – 8:00 pm
Tuesday, March 19	9:00 am – 6:00 pm
Wednesday, March 20	9:00 am – 6:00 pm
Thursday, March 21	9:00 am – 6:00 pm
Friday, March 22	8:00 am – 6:30 pm
Saturday, March 23	8:00 am – 7:30 pm
Sunday, March 24	9:00 am – 5:00 pm

Exhibitor Services
Cobb Galleria Centre (Electrical/Water/Gas)
Nancy Stoeppelwerth
770-989-5016

ONsite (AV services)
770-989-5045

Shepard Exposition Services (carpet, tables/chairs)
404-720-8600

Booth Construction Guidelines – Please pay close attention to the enclosed document and diagram.
MPE provides each inline exhibitor with a back curtain 8 feet in height, two side curtains, each 3 feet in height and a 7"x44" ID sign with company name and booth number. An island booth, opens on all sides, does not have any pipe and drape or an ID sign. **No pop up tents are permitted unless in an island booth.**

Parking
Parking is adjacent to Cobb Galleria Centre, $5 per car (Cards only – No Cash). Should the Galleria lots fill up; a secondary lot will be opened at the Galleria 100 Building. Do not park at Cumberland Mall or the Waverly Hotel unless you are a paid guest there as these two areas are outside of our contracted area.

BOOTH CONSTRUCTION GUIDELINES

MPE provides each inline exhibitor with a back curtain 8 feet in height, two side curtains, each 3 feet in height and an ID sign with company name and booth number. A corner booth has only one side drape. An island booth, opens on all sides, does not have any pipe and drape or ID sign.

- **Inline booth displays, including signage, shall not exceed 8 feet in height**. Signs exceeding booth height requirements must be approved by show management or exhibitor may be asked to remove. Your display may be 8 feet high for the width of your back drape (this only applies to inline spaces). On each side you will have a 3 feet high side curtain. For inline spaces, your display may remain 8 feet in height from the back wall, up to 5 feet from the aisle, or ½ the depth of your booth (see dotted line below). For the remaining 5 feet, your display must return to the same 3 feet height of the side curtain. **No pop up tents allowed unless in an island booth. All flag banners must meet sight guidelines.**

All unfinished portions of displays must be draped or finished so as to be pleasant to the public view. Show Management may require exhibitors to purchase drape if display is not finished adequately. Your own flooring is strongly recommended.
If your exhibit space is a peninsula, special restrictions may apply as indicated by your sales representative.

Please contact your exhibit sales consultant for approval or questions.

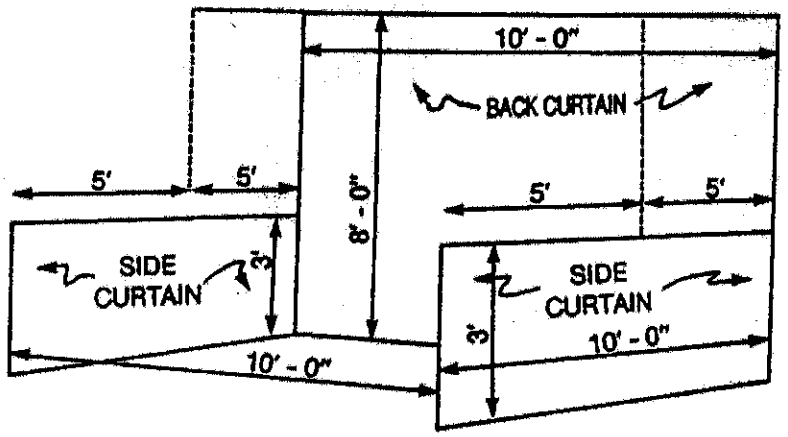

10' Booth

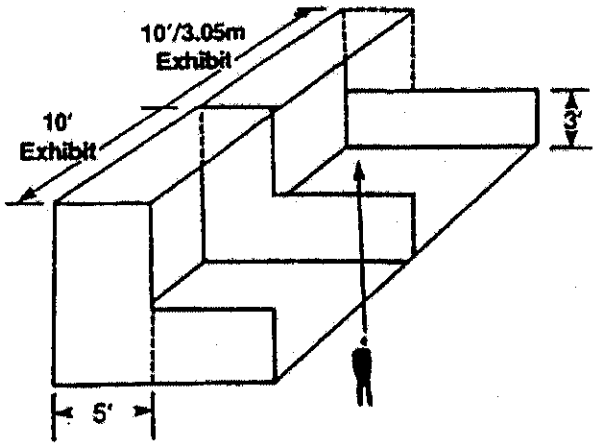

Fire Department Rules and Regulations

No flammable products, open flames, or flammable display materials, etc. are permitted in the exposition hall by order of the Fire Department and the Facility Security Department. Enclosed structures under 300 sq.ft. must have a fire extinguisher and smoke detector. Enclosed structures of over 300 sq.ft. must install a sprinkler system inside the structure. No cartons, boxes, or crates may be stored behind booth curtains. Pine straw is not allowed unless treated.

FLOOR & DECOR TILE • WOOD • STONE

brings you

ATLANTA HOME SHOW

Pop-Up Tents and Flag Banners

Per the Booth Construction Guidelines – **Pop-Up Tents are not allowed in most booths and require pre-approval for limited use.** You may obtain approval to use a pop-up tent in your display, if your booth space is 400+ square feet.

All Flag Banners must comply with sight guidelines. This means, they cannot be more than 8 ft tall (unless in an island booth) and must remain within 5 feet of your back drape.

For question on any of these guidelines please contact your exhibit sales consultant.

FLOOR & DECOR TILE • WOOD • STONE
brings you
ATLANTA HOME SHOW

March 22-24, 2019
Cobb Galleria Centre

Exhibitor Discount Tickets & Badges

Exhibitor Badges
Exhibitors will be allotted 5 "Exhibitor" badges for under 200 sq. ft. and 10 badges for 201 sq. ft and up. Badges will be available at Exhibitor Registration for pickup during move-in and show hours. Additional badges and replacement badges may be purchased for $10.00 each. No badges will be authorized for children under 16. **Exhibitor badges can be purchased at the show office.**

Complimentary Tickets
Show Management will provide at no charge **5 regular adult tickets per 100 sq. ft. of exhibit space up to a maximum of 30 tickets** to be used at the exhibiting company's discretion. These tickets will be available at Exhibitor Registration during move-in and show days. **Exhibiting companies may leave tickets at "Will Call", located at the Show Office for your customers under your company name.**

Exhibitor Discount Tickets Must Be Ordered In Advance

Advance discount tickets priced at $5.00 each are available to exhibitors who wish to give tickets to friends, customers, or employees. Complete the following form and return to MPE with payment for the total amount due. All tickets will be at Will Call. If you need further assistance, please call M.J. Doan at (317) 705-8719, ext. 71.

Company Name:_____

Contact Name:_____

Please process _____ tickets at $5.00 each: $_____

Make checks payable to Marketplace Events and mail to address below.

OR

Charge my Credit Card: [ ]Visa [ ]MC [ ]AMEX In the amount of $ _____

Credit Card Number: _____

Exp. Date: _____ Security Code: _____

Cardholder Name: _____

Cardholder Billing Address:_____

City: _____ State: _____ Zip: _____

Authorized Signature:_____ Date: _____

Please return your completed form to:
Marketplace Events • 12800 N. Meridian St. Suite 135 • Carmel, IN 46032
317-705-8719 • 317-705-8720 fax

FLOOR & DECOR TILE • WOOD • STONE brings you ATLANTA HOME SHOW

March 22-24, 2019
Cobb Galleria Centre

Move-in Procedure

- Exhibitors will receive a move-in time and day approximately 30 days prior to the show, and your **specific days and times must be followed.** If you miss your targeted move-in time, you will go to the back of the line. **No exceptions!** If you are unable to adhere to your assigned move-in day and time, you will have the opportunity to request a different schedule.

- You must proceed to the marshalling area (see enclosed map) for a move-in pass during move-in; passes will be issued only at the marshaling area. **No Passes will be issued to exhibitors with a balance due on their booth**

- The one-day move-in pass permits an exhibitor to bring a vehicle, for a *limited time*, onto the show floor (Monday all day, Tuesday all day, and Wednesday until 12pm ****only passenger vehicles allowed on Wednesday**)** or to the ramps and docks for unloading or loading booth materials on all days. This pass must be displayed on your dashboard at all times. We ask for your cooperation in moving your vehicle off the show floor or away from the ramps and docks as soon as possible, so that we may service other exhibitors. You may NOT park your vehicle on the loading dock wall at any time. Dock access is for move-in and move-out only. All vendors leaving trailers overnight must receive prior approval to park in the marshalling yard near the Cobb Energy Performing Arts Center.

- Driving onto the show floor will be permitted **on MONDAY, TUESDAY, and until 12pm on WEDNESDAY* (ONLY PASSENGER VEHICLES WILL BE ALLOWED ON THE SHOWFLOOR ON WEDNESDAY) as long as there is direct access to your booth.** Exhibitors must unload and remove their vehicle from show floor as soon as it is unloaded.

- **No move-in on Friday, March 22.** If you arrive on Friday to move into your booth, you must park in the regular lot and carry all materials to your booth.

Tips for a successful move-in:

- Move-in all at one time.
- Remember you can and should bring your own dollies and hand trucks.
- Several loading docks are available for your use at no charge, on a first come first serve basis.
- See a **MPE** staff member for on-site assistance.
- Tipping move-in personnel is prohibited.
- Work should be completed each night by 8:00 pm. If you must work later, please notify Show Management. You will be required to sign in with security and stay within your own exhibit space.
- Pick up your Exhibitor Badges at Exhibitor Registration located in Room 120 during move-in to save time. **Wear your exhibitor badges at all times.**
- Keep marked "No-Freight" aisles clear at all times.

Reminders:

- Cutting of all dust-producing materials must be done in the designated cutting area outside in the loading dock area, located adjacent to Ramp 1. This is monitored 24/7 by the Cobb Galleria Centre security cameras.
- **No inline booths or booth signs can extend above 8' unless exhibit is located along the perimeter walls of the exhibit hall or space is a 400 sq. ft. or larger island exhibit.**
- **Floor covering (carpet, tiles, laminate, wood, stone) is REQUIRED.**
- Plants create a nice business atmosphere.
- **Absolutely NO** Moving in through the front of the building or across any Galleria carpet.
- **No pop up tents allowed unless in an island booth.**

FLOOR & DECOR TILE • WOOD • STONE
brings you
ATLANTA HOME SHOW

March 22-24, 2019
Cobb Galleria Centre

Move-out Procedure

- The Spring Atlanta Home Show comes to a close at 5:00 pm on Sunday, March 24th. On Sunday night, **move-out proceeds through the Marshalling area.** No move-out passes will be issued before 4pm on Sunday.

- **If your booth ends in the numbers 43-59 (ex. 1256), it is mandatory that you move-out on Sunday night.**

- **All other** booths that can move-out on Sunday should do so, as there will be heavy truck traffic on the show floor on Monday.

- The move-out pass permits an exhibitor to bring a vehicle, for a *limited time*, onto the show floor (Monday only) or to the ramps and docks for loading booth materials. This pass must be displayed on your dashboard at all times. We ask for your cooperation in moving your vehicle away from the ramps and docks as soon as possible, so that we may service other exhibitors.

- Forklifts and carts will be available for a fee and can be obtained from the Shepard Service Desk. Save money by bringing your own carts and dollies. A limited number of flat bed dollies are available from MPE at no charge. Please request any and all costs be quoted in advance for services at the show.

- All material must be removed from the show exhibit hall by **2:00 pm on Monday, March 25th**. If your display is not removed by this time, it may be disposed of or will be removed by the service contractor who will charge you accordingly. The show's exhibit hall contract ends at 2:00pm and there can be NO exceptions to this. Labor fees to move and store your exhibit materials can be very costly.

- It is the sole responsibility of the exhibitor to have personnel stay with your booth from teardown through loading to ensure the safety of your product. Please be aware that it is particularly easy for product to "disappear" during this time. For security purposes, we request that all exhibitors wear their show badges during move-out.

- See a **MPE** staff member for any on-site assistance. Our main objective is to provide a smooth and safe move-out with an acceptable flow of traffic. We must maintain full control and security of the exhibit area and your full cooperation and patience during this busy time is appreciated.

Reminders:

- ❖ What you bring in, take out. ***Leave the Cobb Galleria Centre floor in broom-clean condition. If you do not, you could be charged. This includes carpet tape residue on the floor.***

- ❖ Tipping move-out personnel is prohibited.

- ❖ **Absolutely NO** Moving out through the front of the building or across any Galleria carpet.

FLOOR & DECOR TILE • WOOD • STONE
brings you
ATLANTA HOME SHOW
March 22-24, 2019
Cobb Galleria

Security Bulletin

REMINDER: Exhibitors are allowed inside the Exhibit Halls on show days one hour prior to opening and 30 minutes after closing. Permission must be obtained from Show Management for times other than stated.

Nothing can ruin a successful show experience more than the loss or theft of expensive equipment or products. Marketplace Events and the security contractor provide **24-hour uniformed security and the Cobb Galleria Centre has camera surveillance**, but you and your staff are responsible for your valuables. Please be assured that we are all doing everything possible to prevent theft. Here are some basic steps you can take to help . . .

1. Treat valuable goods as irreplaceable. Under no circumstances should such goods ever be unattended. Televisions, computers, and other electronic devices are particularly vulnerable to theft.

2. All items sold at the show that will be picked up during move-out need an *Itemized Bill of Sale with your booth number* for removal from the show.

3. At the close of the show each day, cover all display tables to prohibit curiosity-seekers and would-be thieves.

4. Wear your show badge **at all times** during move-in, throughout the show, and move-out. This will help us identify anyone that should not be on the show floor.

5. Move-out is an easy time for product(s) to disappear. **Don't leave your booth unattended**.

6. **Report any suspicious activity to show management** – look for a MPE staff member or proceed to the Show Office, Room 120 in the main lobby area.

7. Obtain proper insurance coverage for your goods, including transit to and from the show site. There is a form in the Exhibitor Service Kit for an insurance provider, or you may request a special rider from your insurance carrier covering you over the specific show dates.

Our objective is to make your show experience as pleasant, worthwhile, and as profitable as possible. Following these simple security measures will help ensure your success. Please see a MPE staff member if you have any questions or need assistance with any show related issue.

Have a great show!

FLOOR & DECOR TILE • WOOD • STONE
brings you
ATLANTA HOME SHOW

March 22-24, 2019
Cobb Galleria Centre

Special Show Rate Hotel

Sheraton Suites Galleria

2844 Cobb Parkway SE
Atlanta, GA 30339
Phone: 770-955-3900

Special Show Rate: $145 per night, plus taxes.

The Sheraton Suites Galleria is connected to the Cobb Galleria by a pedestrian sky bridge.

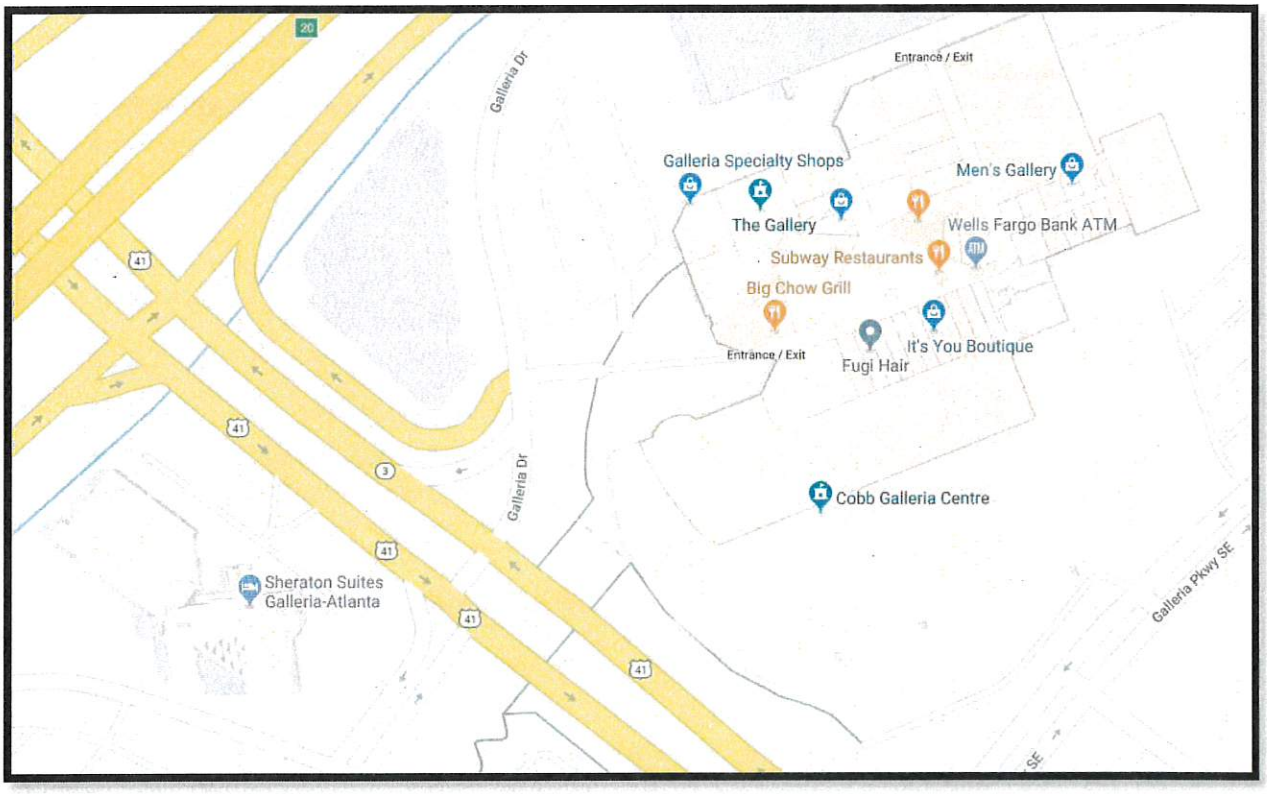

You can call the hotel directly to make reservations or make your reservations online at:
https://www.marriott.com/event-reservations/reservation-link.mi?id=1810226115&key=30FA5156&app=resvlink

FREE WIFI

Compliments of:

PMC

Find Your Pro Contractor

PMCPros.com

PMCPros has three locations:
PMC West: 2009 Dorsey Road, Marietta, GA 30066
PMC East: 175 Buford Drive (Hwy 20), Lawrenceville, GA 30046
PMC South: 189 Lower Bay St., Macon, GA 31206

Wi-Fi login instructions:

Network: EVENTS
Username: atlantahs
Password: spring2019

We sincerely appreciate your support of the Atlanta Home Shows and thank you for being an important part of this Atlanta tradition!

MARKETPLACE | EVENTS